MATERIAL TYPE (ABS, HIPS, ETC)	COLOR (BLACK, GRAY, ETC)	"A" BOX LENGTH	"B" BOX DEPTH	"C" BOX HEIGHT	"D" BOX MATL THICK (3mm, 4mm)	UL FLAME RATING (HB, VO, ETC)	UV COATING (OUTDOOR USE) (YES/NO)	EMI COATING INSIDE (SHIELDING)	PCB STANDOFF QUANTITY	SILKSCREENING REQUIRED

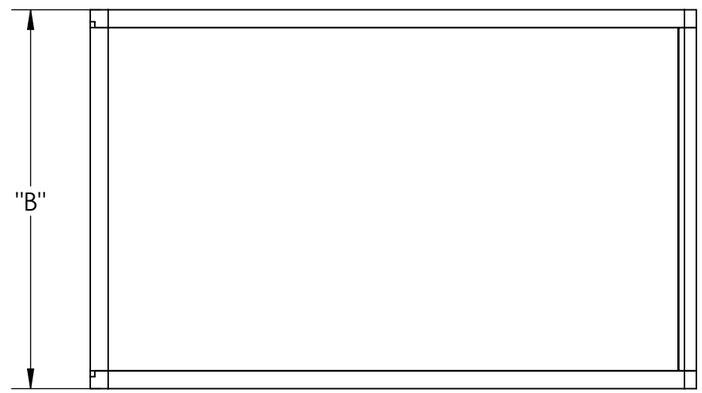

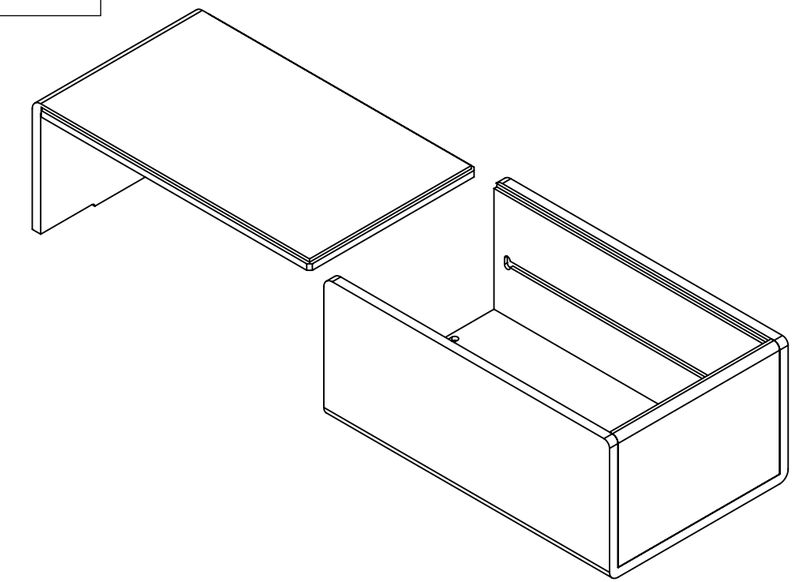

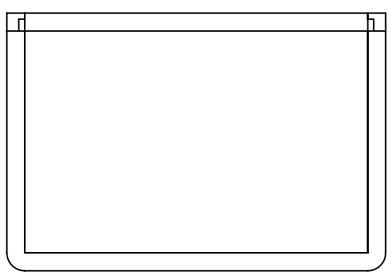

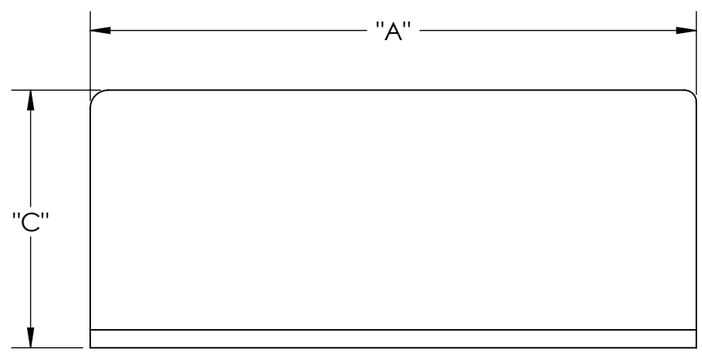

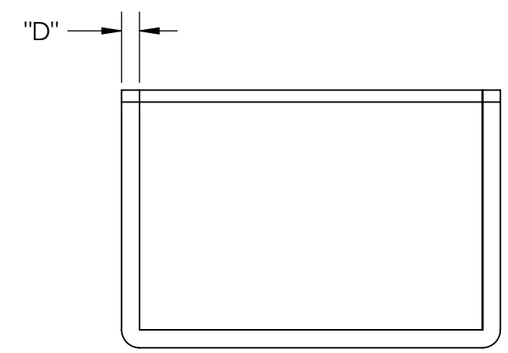

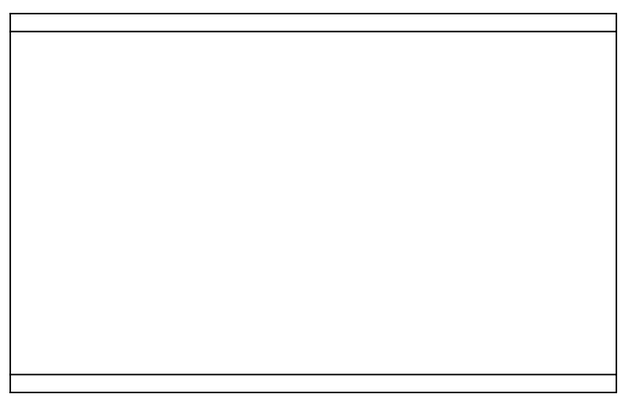

NOTE: COMPLETE ALL TAB INFORMATION AT TOP OF DRAWING & SKETCH APPROX HOLES ON BOX.

ENVISION KB #	UNLESS OTHERWISE SPECIFIED DIMENSIONS ARE IN INCHES TOLERANCES ARE: FRACTIONS +/- 1/32 DECIMALS .XX +/- .02 .XXX +/- .010 ANGLES +/- 1		ENVISION PLASTICS & DESIGN
CAD GENERATED DRAWING. DO NOT MANUALLY UPDATE DO NOT SCALE DRAWING	CBW	DATE 10/7/10	BOX QUOTE WORKSHEET L-SLIDE ENCLOSURE
APPLICATION	MATL: PLASTIC FINISH: TEXTURE OUTSIDE	SIZE B	DWG. NO. L_SLIDE_BOX / REV. -
SCALE: 1:1	CADFILE:I:\Engineering Files\Envision Solidworks\ENVISION\SAMPLES\WEBSITE\		SHEET 1 OF 1